Advanced Technology Microwave Sounder (ATMS)

ATMS Overview

The Advanced Technology Microwave Sounder (ATMS) is a new generation microwave instrument being developed for NPOESS. The ATMS is a follow-on instrument to the Advanced Microwave Sounding Unit (AMSU), currently flying on NOAA satellites. The primary new ATMS features are a reduced hardware package and improved gap coverage. NASA/GSFC is responsible for development costs and the first prototype flight unit, and NPOESS is responsible for future production units. Northrop Grumman Electronic Systems (NGES), Azusa, CA, is the ATMS primary contractor. The first flight unit will fly on the joint NPOESS/NASA NPP mission as an environmental mission for NASA, and a risk reduction mission for NPOESS. Future production units will fly on NPOESS satellites. The ATMS will provide global atmospheric temperature and humidity profiles.

Temperature and humidity profiles are best measured using both microwave and infrared (IR) sounders together. The ATMS will work with the Cross-track Infrared Sounder (CrIS), which will also be flown aboard the NPP and NPOESS satellites. The IR and microwave sounders complement each other. IR sounders provide better spatial resolutions, but they do not function well in cloudy regions, which are most interesting for weather forecasting purposes. Microwave sounders, on the other hand, generally have poorer spatial resolutions, but because they use longer wavelengths, their performance is not diminished by most cloud conditions encountered.

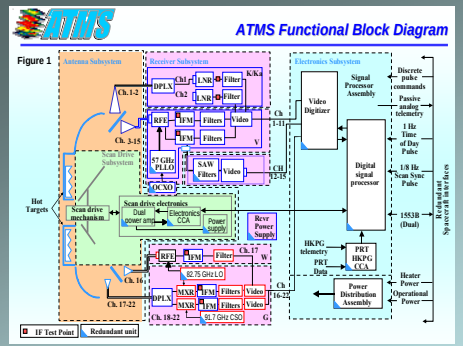

The ATMS Functional Block Diagram to the left provides a block schematic showing the subsystems of the ATMS. The ATMS Instrument Design Illustration to the right shows the physical features of the ATMS instrument design.

Beginning with the front-end microwave optics, the 22 channels of the ATMS are divided into two groups: a low-frequency (23 to 57 GHz) group, and a high-frequency (88 to 183 GHz) group. The low-frequency channels, 1 through 15, are primarily for temperature soundings and the high-frequency channels, 16 through 22, are primarily for humidity soundings.

Each group has an antenna aperture followed by a diplexing subsystem to further separate the channels. However, the input antenna elements are two flat reflectors that are joined together mechanically and are driven by a single scan-drive motor with its associated control electronics. The single scanner design is necessary in order to realize the small sensor volume of approximately 40 cm x 60 cm x 70 cm.

The microwave emissions from the atmosphere entering the antenna apertures are first reflected by a scanning, flat-plate reflector to a stationary parabolic reflector, which focuses the energy to a feed-horn. Behind the feedhorn, channels are frequency-diplexed into separate channels that are then amplified and fed though a band-pass filter and to a detector. The detected signal is integrated and routed to the signal processor for buffering and transferring to the spacecraft and beyond.

Channels 1 and 2 provide water vapor and surface emissivity information needed for temperature profile retrieval. Channels 3 through 15, are nearly identical to that of the AMSU-A; only Channel 4 is a new addition. Channels 3 through 15 are the center frequencies of the temperature sounding channels which are located on both sides of the 57.29 GHz oxygen resonance to provide temperature soundings to 3 mb (~37 km altitude).

Channels 16 to 22 form the humidity-sounding group. Most of these channels are clustered about the strongly opaque water vapor line at 183.3 GHz. Channels 18 to 22 have two pass-bands. These pairs of pass-bands are located symmetrically about the peak of the 183.3 GHz line so that the opacity values of each pass-band is about the same.

Channel 17 is equivalent to the 150 GHz channel of the AMSU-B, except the center frequency has been moved to a new location to utilize a single cavity stabilized oscillator. Channels 19 and 21 are two additional channels in this group, from the AMSU-B. These new channels will enhance the humidity profiling performance.

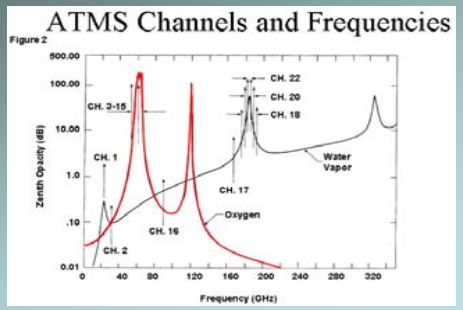

Development

A GSFC, Phase A Study determined that the ATMS could be built with approximately one-third of the volume, mass, and power compared to it's predecessor, AMSU, with equal or better performance. The most challenging of these goals have been the development of a newly designed, smaller and lighter Scan Drive System, and development of the advanced Monolithic Microwave Integrated Circuit (MMIC) technology for the front-end radio frequency modules. Recent development accomplishments include:

1) the ATMS EDU has successfully completed integration and a series of functional and environmental tests
2) the first Scan Drive System has been delivered and tested in the EDU instrument
3) an updated Scan Drive Electronics subsystem control algorithm for the Flight Unit has been successfully completed
4) alternate solutions for the Gunn diodes for phase locked oscillators have been implemented
5) an alternate MMIC has been implemented to improve Channel 16 performance to meet the contractual specification (as are all other channels)

The ATMS NPP Flight Unit delivered in 2005 to the NPP Spacecraft for test and integration has operated successfully thus far. The ATMS NPOESS C1 system is currently in development, build, and test with the ATMS NPOESS C1 Flight Unit Scheduled to Deliver in 2011.

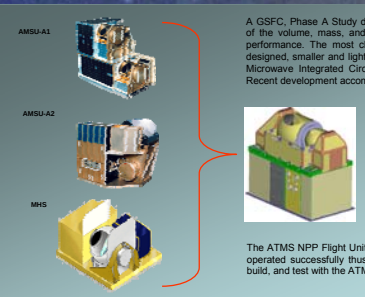

ATMS Instrument Design

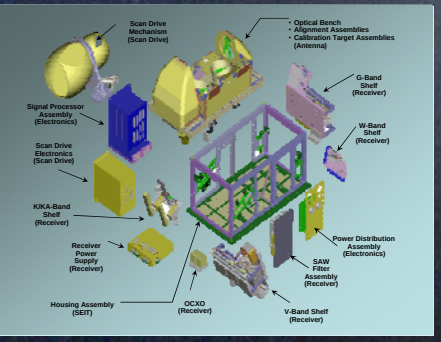

NEΔT Performance

The actual measurements provided were taken during NPP ATMS Flight Unit Thermal Vacuum Test. This test demonstrated that the ATMS Flight Unit did meet requirements. The NEΔT Performance Prediction provides the predicted temperature sensitivity, NEΔT, for the NPP ATMS Flight Unit. Worst-case predictions are provided. Worst-case predictions were derived from supplier data and worst-case component specification limits. All channels were predicted to meet NEΔT specifications. These performance predictions were independently verified by two separate models at NGES and another model at MIT Lincoln Labs.

		Measured Values		Worst Case Prediction	
CH	Req't (K)	NEΔT (K)	Margin (%)	NEΔT (K)	Margin (%)
1	0.50	0.253	49.4	0.34	32.1
2	0.60	0.34	43.3	0.42	30.4
3	0.70	0.391	41.7	0.54	23.3
4	0.50	0.292	39.9	0.38	23.5
5	0.50	0.300	39.9	0.39	22.7
6	0.50	0.304	39.1	0.41	18.0
7	0.50	0.297	40.6	0.42	16.6
8	0.50	0.288	42.5	0.42	16.6
9	0.50	0.313	37.4	0.44	11.2
10	0.75	0.442	41.1	0.63	15.8
11	1.00	0.590	41.0	0.87	12.6
12	1.00	0.621	37.9	0.96	4.1
13	1.50	0.982	39.9	1.42	5.3
14	2.20	1.248	43.3	1.96	11.0
15	3.60	2.032	43.6	3.25	9.7
16	0.30	0.298	0.5	0.30	0.0
17	0.60	0.465	22.5	0.59	1.5
18	0.80	0.375	53.1	0.45	43.8
19	0.80	0.456	42.9	0.45	43.3
20	0.80	0.539	32.6	0.56	29.7
21	0.80	0.589	26.4	0.58	27.7
22	0.90	0.731	18.8	0.76	15.0

Technical Performance Measures

Key Parameter	Spec/Req't* Value	Measured	Basis
Cal Accuracy (K)	< 0.75-1	< 0.22-.5	Flight Unit Measurement
Nonlinearity (K)	< .20-.36*	< 0.20-.36	Flight Unit Measurement
Beam Efficiency (%)	> 95	> 95	Flight Unit Measurement
Freq. Stability (MHz)	< 0.50	0.45	Flight Unit Measurement
Pointing Knowl. (deg)	< 0.05	0.028	Flight Unit Measurement
Mass (kg)	< 85	75.5	Flight Unit Measurement
Power (W)	< 110	105.2	Flight Unit Measurement
Data rate (kbps)	< 30	28.9	Flight Unit Measurement
Reliability	> 0.86	0.87	Analysis

The ATMS Engineering Development Unit (EDU) successfully completed integration and a series of functional and environmental tests including thermal balance, calibration accuracy, thermal vacuum cycling, vibration and antenna verification. Radiometric performance and calibration accuracy were measured in these tests. The bases for the technical performance measure projections include measurements from the EDU during testing, measurements from the Flight Unit, and analysis using predictive models. All key parameters were projected to meet specifications and they met requirements based on the Flight Unit measurements.

Conclusion

The ATMS will be a key instrument for the NPOESS polar-orbiting weather satellites in the next couple of decades. In conjunction with the CrIS, the improved accuracy in atmospheric temperature and humidity soundings, in combination with observations from other NPOESS instruments, will enable significantly improved weather forecasts over the next decade. Development challenges have been encountered with the ATMS due to the reduced volume, mass and power requirements. In addition, lifetime requirements are more stringent due to the longer program span and required orbital life for NPOESS.

Based on the latest development status, ATMS is successfully meeting these challenges. The initial ATMS Flight Unit is scheduled to fly on the NPP Spacecraft. For NPOESS, the ATMS is slated to fly on the 1330 orbit. Similar data capabilities for the 2130 orbit will be provided by the EUMETSAT. The latest NPOESS schedule shows the first NPOESS ATMS to fly on the NPOESS C1 spacecraft in 2013.

12/08