NPOESS

Northrop Grumman · Raytheon · DOC • DoD · NASA

National Polar-orbiting Operational Environmental Satellite System (NPOESS)

Field Terminal Segment

Field Terminal Concept

Typical Received Contacts – Omaha FT (41N 96W), One Day

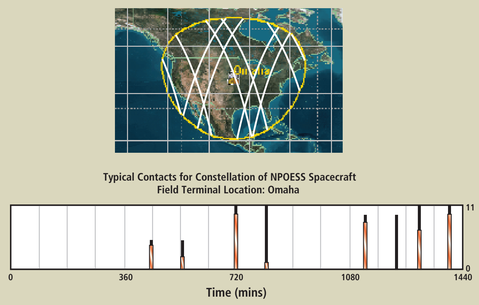

HRD EDR-to-Sensor Mapping

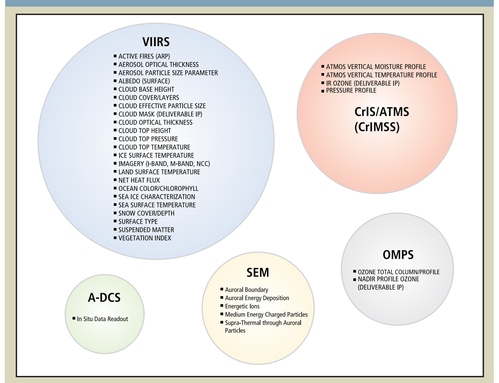

LRD EDR-to-Sensor Mapping

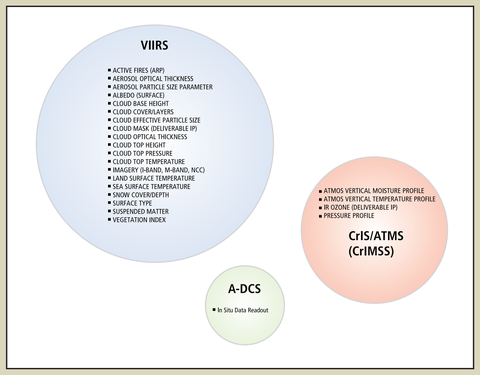

FTS Architecture

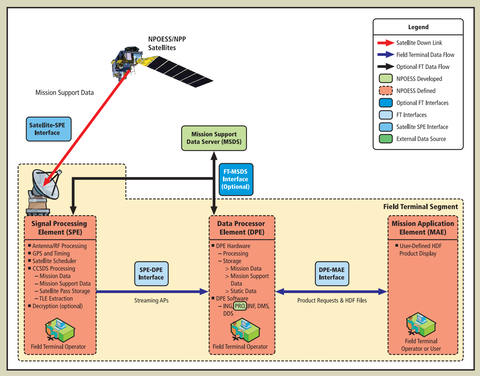

FTS Subsystems – SPE

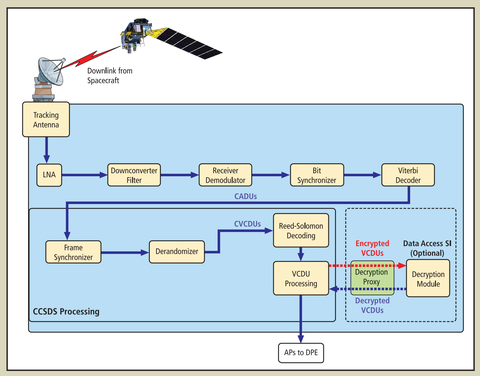

FTS Subsystems – DPE

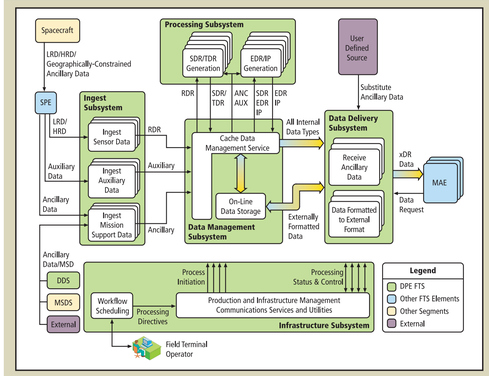

Satellite Contacts – NPOESS (1330, 1730)

Latitude (degrees N/S)	Total Contacts (17 day period)	Average Contacts (per day)	Maximum Contact Duration (minutes)
0	128	7.57	12.89
10	130	7.65	12.90
20	136	8.00	12.92
30	150	8.86	12.95
40	173	10.19	12.99
50	217	12.79	13.03
60	334	19.69	13.07
70	376	22.12	13.10
80	483	28.43	13.12
90	482	28.39	12.37

FTS SPE 24 Hour Storage Estimates (GB)
Constellation of 2 NPOESS Satellites (1330, 1730)

Latitude (degrees N/S)	HRD	LRD
0	29.07	5.64
10	29.35	5.69
20	30.70	5.96
30	34.00	6.60
40	39.12	7.59
50	49.07	9.52
60	75.56	14.66
70	84.89	16.47
80	109.12	21.17
90	108.97	21.14

FTS DPE 24 Hour Storage Estimates (GB)
Constellation of 2 NPOESS Satellites (1330, 1730)

Latitude (degrees N/S)	HRD	LRD
0	1811	1724
10	1829	1741
20	1913	1821
30	2119	2017
40	2438	2320
50	3058	2910
60	4707	4481
70	5289	5034
80	6799	6471
90	6789	6462

FTS DPE Predicted Processing Requirements

Constellation of 2 NPOESS Satellites (1330, 1730)
4.7 GHz Processors, Split VIIRS SDR Architecture (16-scan VIIRS Granules)
10/22/2008 Results

HRD		LRD	
Processors	Maximum EDR Latency (Minutes)	Processors	Maximum EDR Latency (Minutes)
14	12.67	12	14.58

FTS DPE Memory and Disk I/O Requirements

Constellation of 2 NPOESS Satellites (1330, 1730)
16-Scan VIIRS Granules
11/05/2008 Results

	HRD	LRD
Memory (GB)	42	40
Disk I/O (MBps)	520	500

Link Characteristics

Link Parameter	HRD	LRD
Channel Data Rate	40 Mbps	7.76 Mbps
Modulation with bit interleaving	SQPSK with square root raised cosine pulse shaping [alpha = 0.5]	SQPSK with square root raised cosine pulse shaping (alpha = 0.5)
Coding	(255, 223) Reed-Solomon with I=4	(255, 223) Reed-Solomon with I=4
Convolutional Encoding: Code Rate Constraint Length Connection Vectors Phase relationship Symbol inversion Number of encoders Branch Encoder Sent to I Modulator Sent to Q Modulator	 ½ 7 bits G1=1111001, G2=1011011 G1 associated with first symbol On output path of G2 1 No G1 Symbol inverted G2	 ½ 7 bits G1=1111001, G2=1011011 G1 associated with first symbol On output path of G2 1 No G1 Symbol inverted G2
Randomization	$h(x) = x^8 + x^7 + x^5 + x^3 + 1$	$h(x) = x^8 + x^7 + x^5 + x^3 + 1$
Maximum Occupied Bandwidth (98% power)	30.8 MHz	6.0 MHz
BER after decoding	$< 10^{-8}$	$< 10^{-8}$
Carrier Frequency	7834MHz	1707.0 MHz
Polarization	RHCP	RHCP
Minimum elevation angle	5.0 degrees	5.0 degrees
Orbit-averaged availability	99.6%	99.9%
Data Format	NRZ-M (Prior to Convolutional encoder)	NRZ-M (prior to Convolutional encoder)

Assistance in the Development of NPOESS Field Terminals

The following documents are being developed under the NPOESS contract for free distribution to field terminal equipment vendors around the world:

- The minimum specifications required for these terminals will be documented in the Field Terminal Technical Specification
- All necessary external interfaces will be documented in the Field Terminal Interface Control Document

Joseph A. Bradley
NPOESS Field Terminal Lead

Raytheon Company
7101 Mercy Road, Suite 400
Omaha, NE 68106
402.390.6865
Joseph_A_Bradley@raytheon.com

NORTHROP GRUMMAN

Raytheon

Customer Success Is Our Mission